4. Troubleshooting

4-1. Checkpoints by Error Mode

Oscilloscope Setting Values	
Voltage/DIV	1V/div
TIME/DIV	500ms/div

4-1-1. No Power

Symptom	• If you connect the power cables, the LED on the front will turn on • If the units do not work
Major checkpoints	• If the cable is improperly connected or the motherboard does not work, the LED on the front is not working. In this case, check the following. - Check the cable connection. - Check the fuse of the components.
Diagnostics	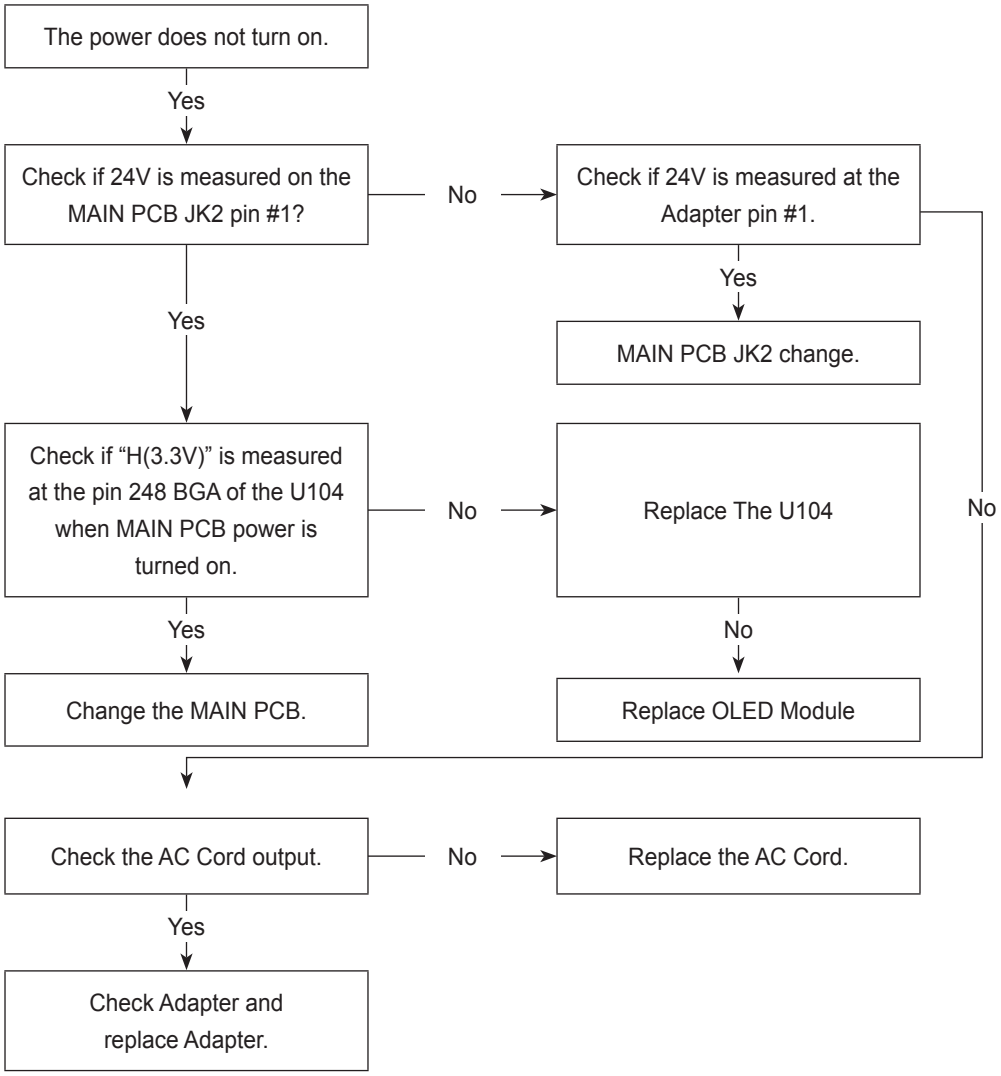
Caution	• Before working, disconnect the power cord.

■ Location of Parts

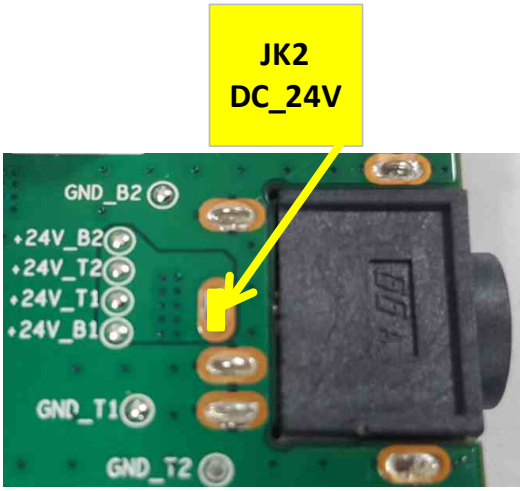

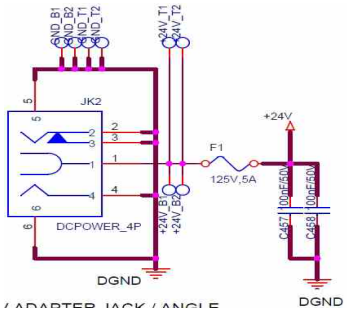

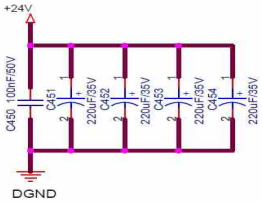

4-1-2. No Sound Output

Symptom	• If the sound is not output.
Major checkpoints	• Speaker connector is not connected properly or check for damage. • Make sure your sound processing functions operate properly on the motherboard. • Make sure the speaker isn't bad.
Diagnostics	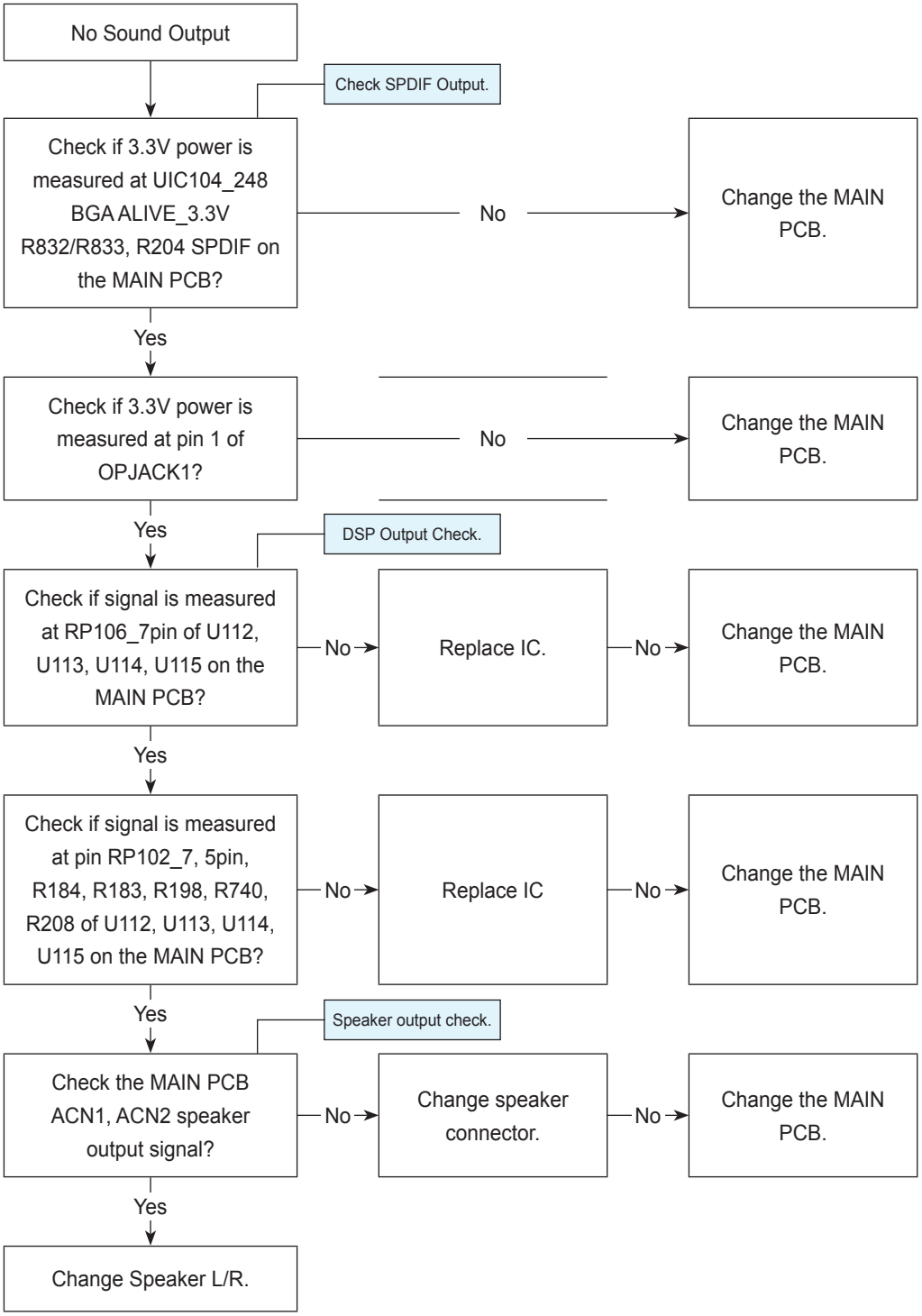
Caution	• Before working, disconnect the power cord.

■ Location of Parts

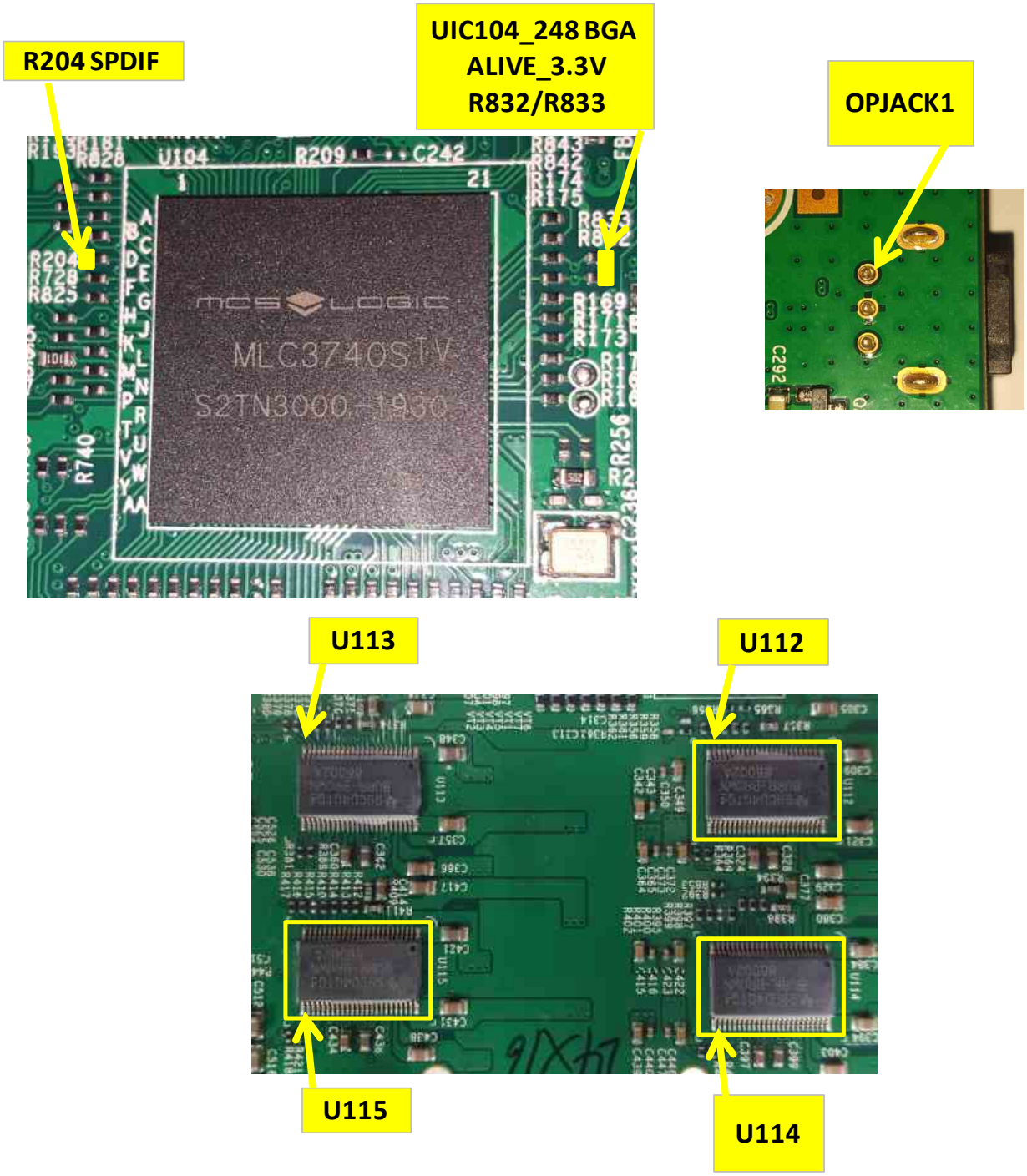

4-1-3. BT Module Failure Analysis

Diagnostics

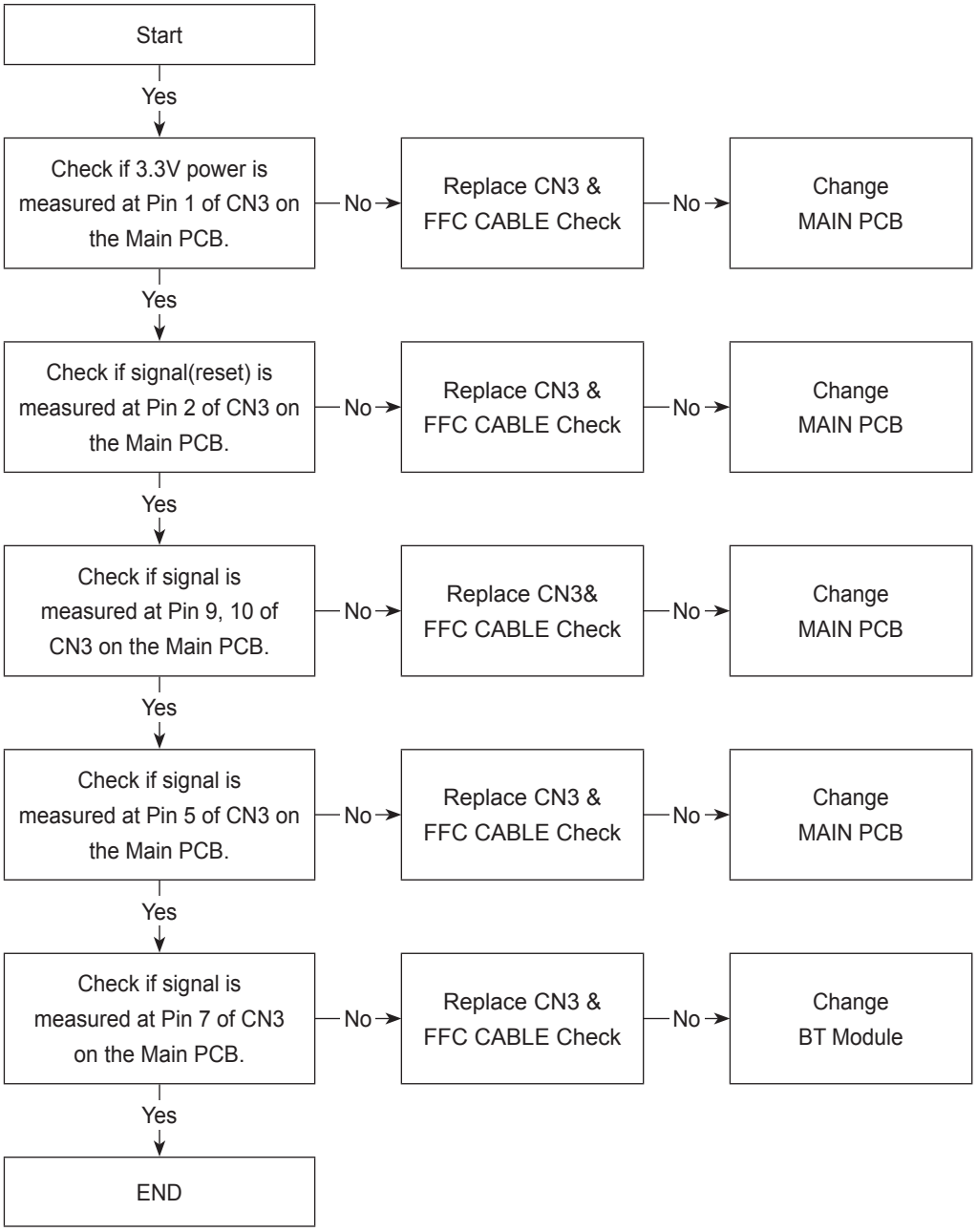

Caution

- Before working, disconnect the power cord.

■ Location of Parts

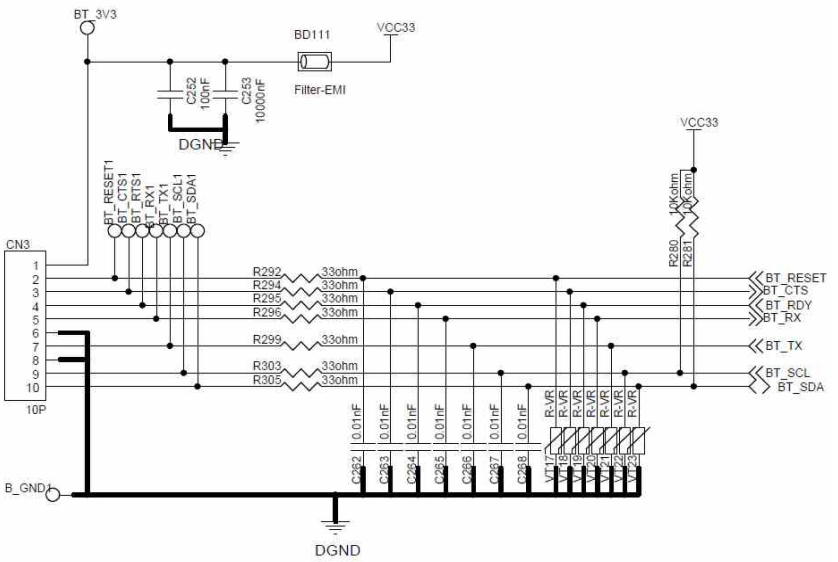

CN3	
MAIN <-> BT	
1	BT_3V3
2	BT_RESET
3	BT_CTS
4	BT_RTS
5	BT_RX
6	DGND
7	BT_TX
8	DGND
9	BT_SCL
10	BT_SDA

TO MB8811Q-A B/T MODULE

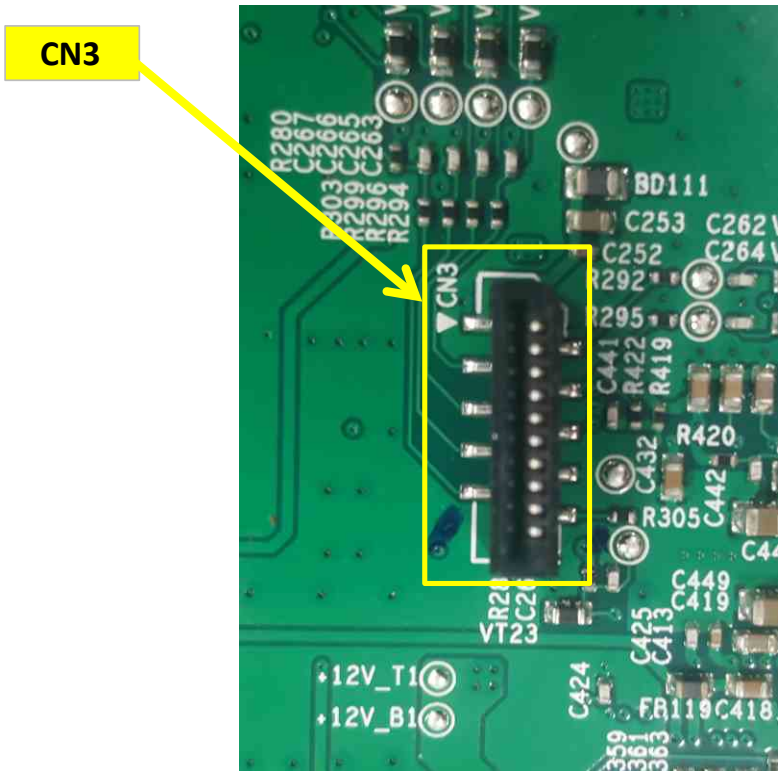

4-1-4. Wireless Module Failure Analysis

Diagnostics

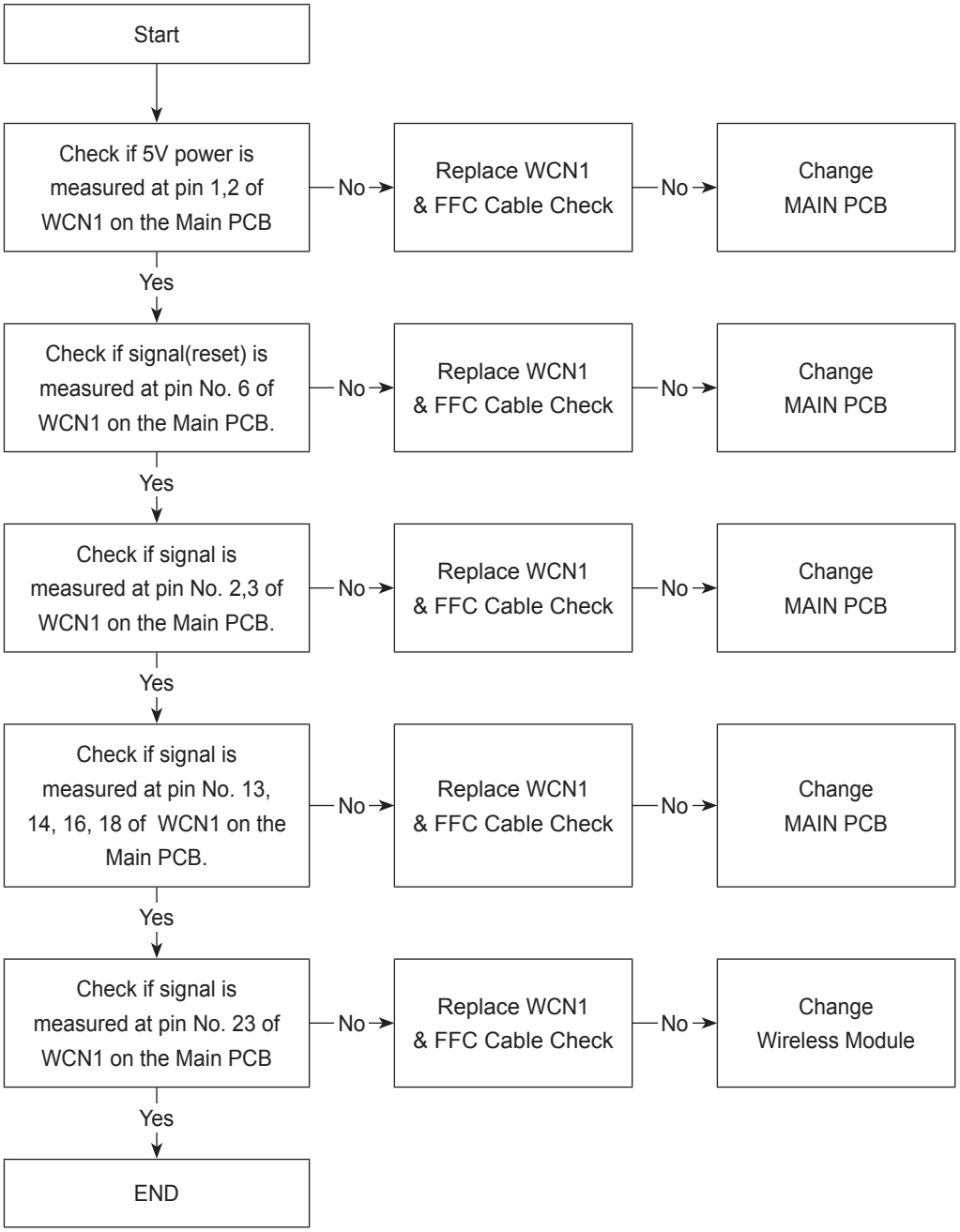

Caution

- Before working, disconnect the power cord.

■ Location of Parts

WIRELESS (5GHz Wireless Audio Transceiver)

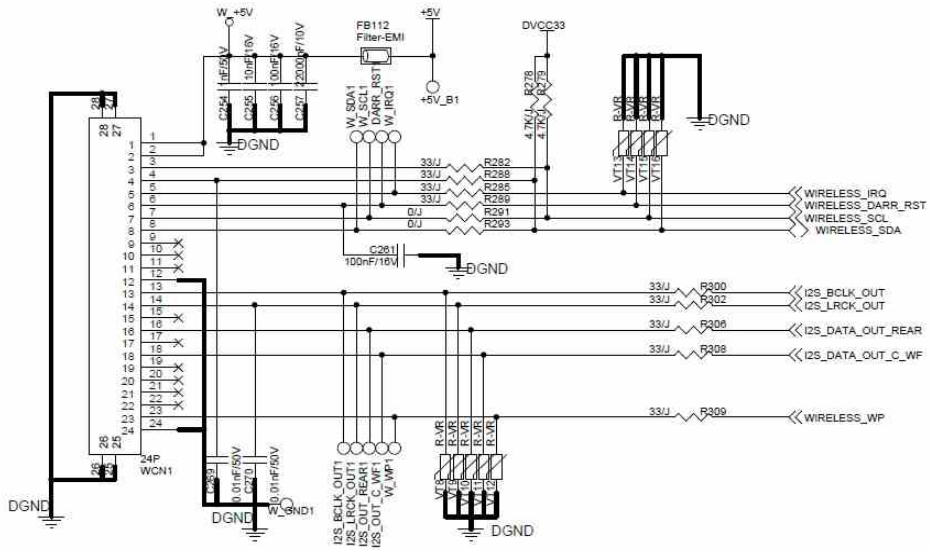

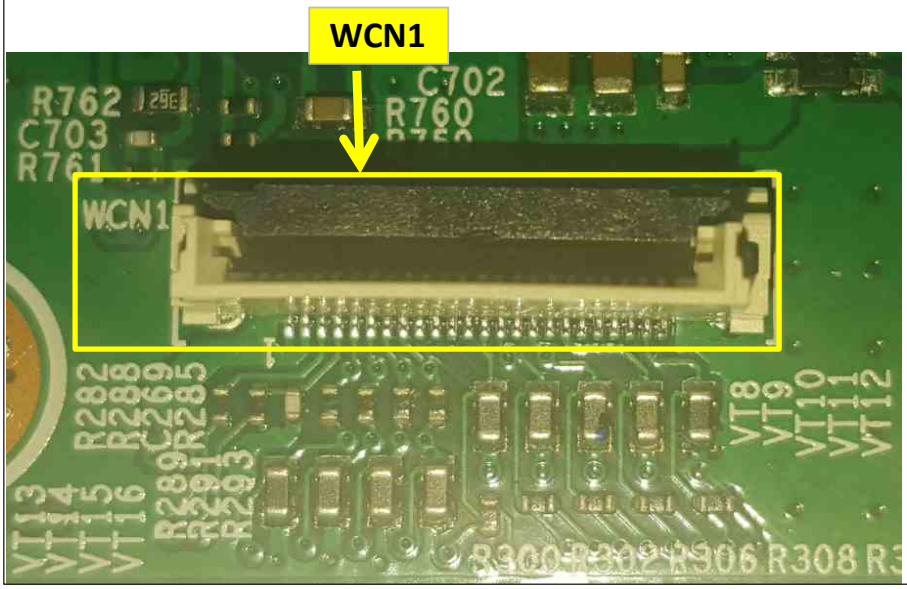

WCN1	
MAIN↔Wireless	
1	W_+5V
2	W_+5V
3	DVCC33
4	DVCC33
5	W_IRQ
6	W_DARR_RST
7	W_SCL
8	W_SDA
9	NC
10	NC
11	NC
12	DGND
13	BCK
14	LRCK
15	NC
16	W_REAR_DATA
17	NC
18	W_C_WF_DATA
19	NC
20	NC
21	NC
22	NC
23	W_WP
24	DGND

4-1-5. OLED Module Failure Analysis

Diagnostics

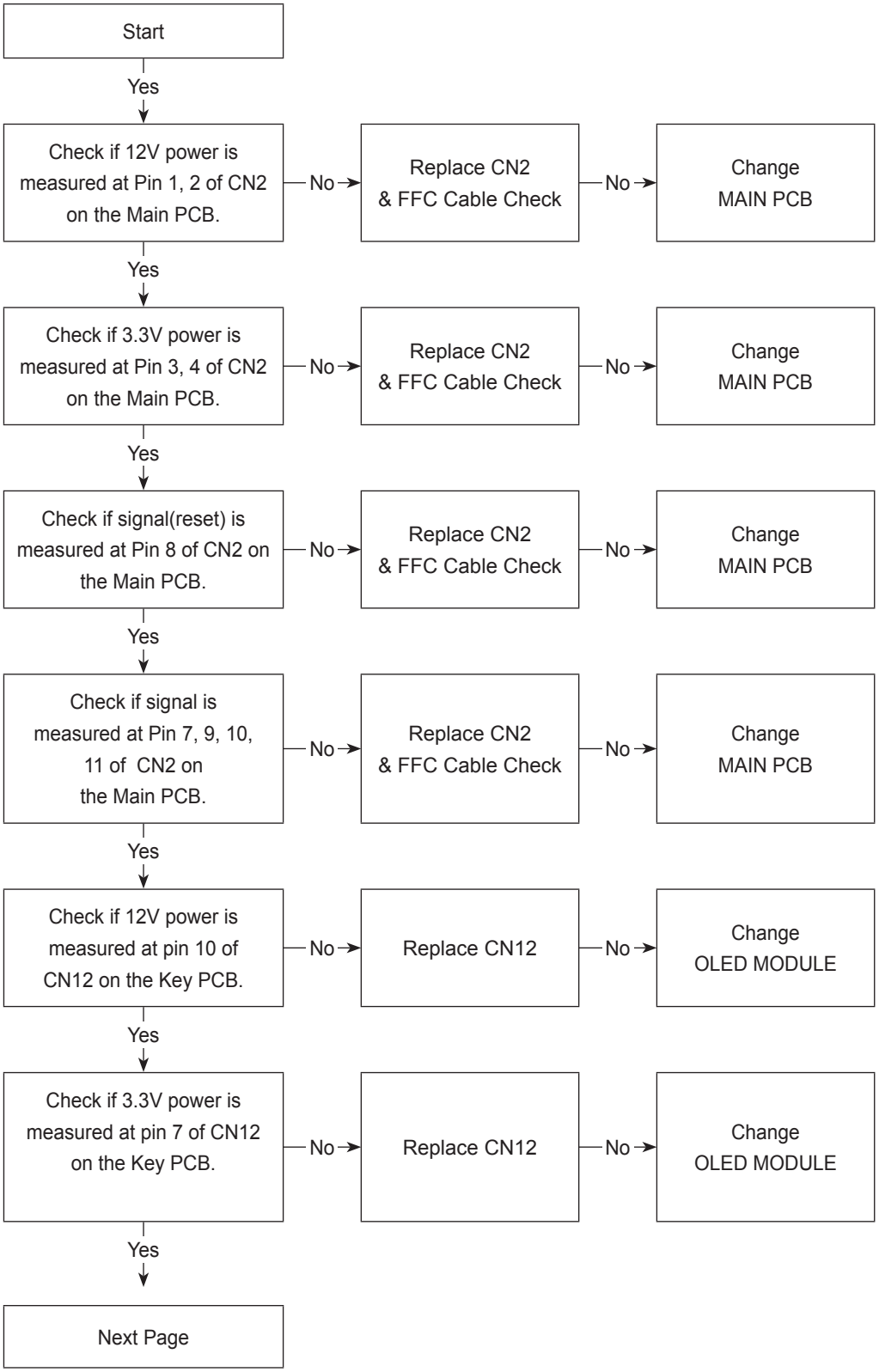

Diagnostics	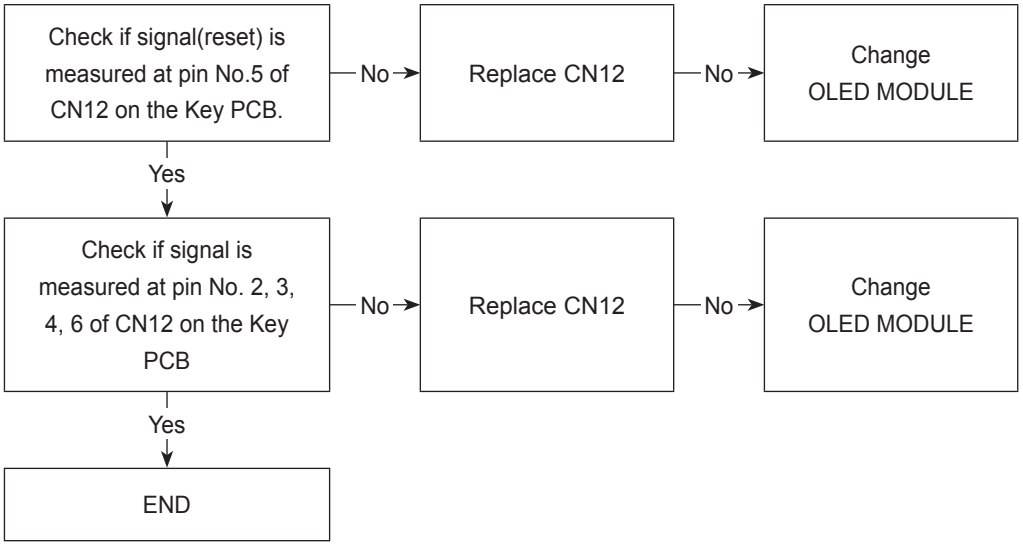
Caution	• Before working, disconnect the power cord.

■ Location of Parts

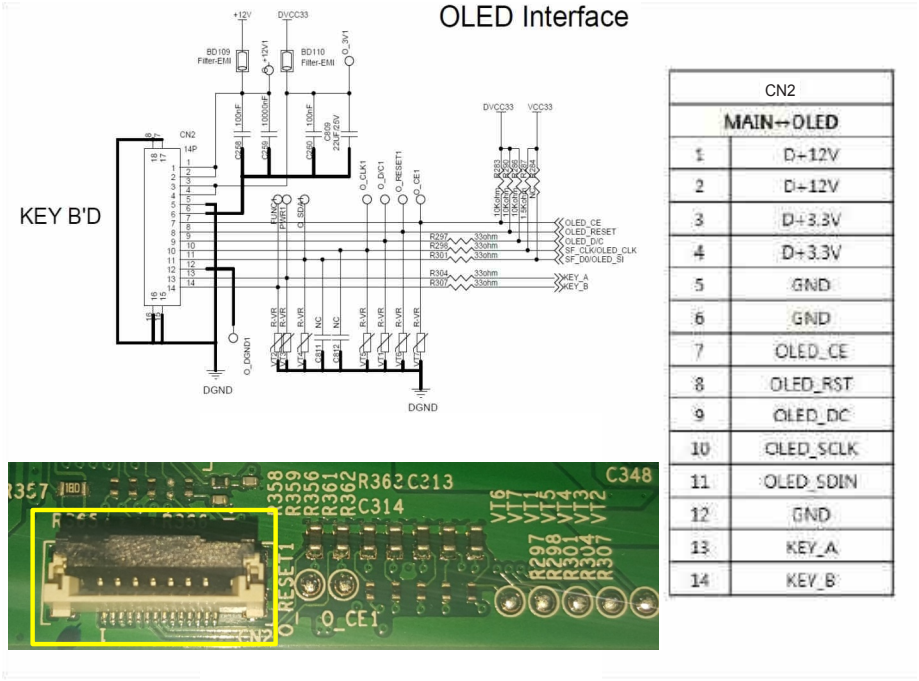

CN2	
MAIN↔OLED	
1	D+12V
2	D+12V
3	D+3.3V
4	D+3.3V
5	GND
6	GND
7	OLED_CE
8	OLED_RST
9	OLED_DC
10	OLED_SCLK
11	OLED_SDIN
12	GND
13	KEY_A
14	KEY_B

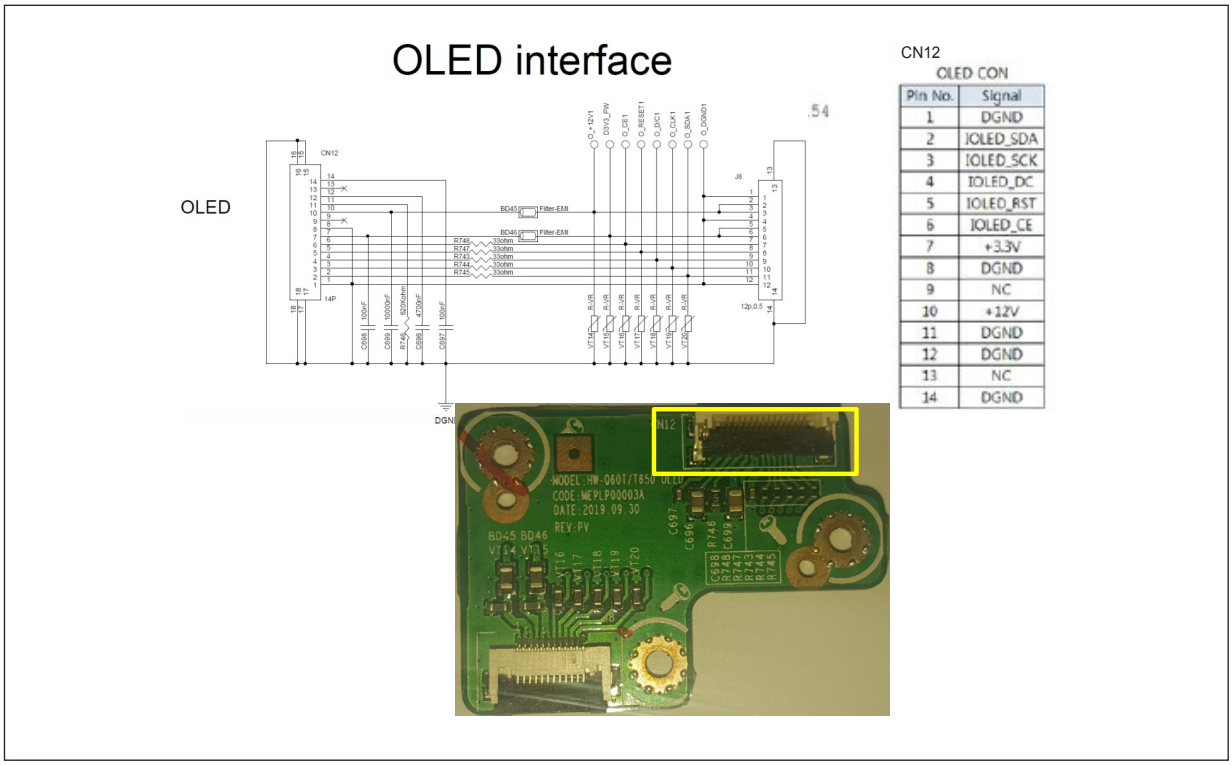

CN12
OLED CON

Pin No.	Signal
1	DGND
2	IOLED_SDA
3	IOLED_SCK
4	IOLED_DC
5	IOLED_RST
6	IOLED_CE
7	+3.3V
8	DGND
9	NC
10	+12V
11	DGND
12	DGND
13	NC
14	DGND

4-1-6. USB / HDMI Failure Analysis

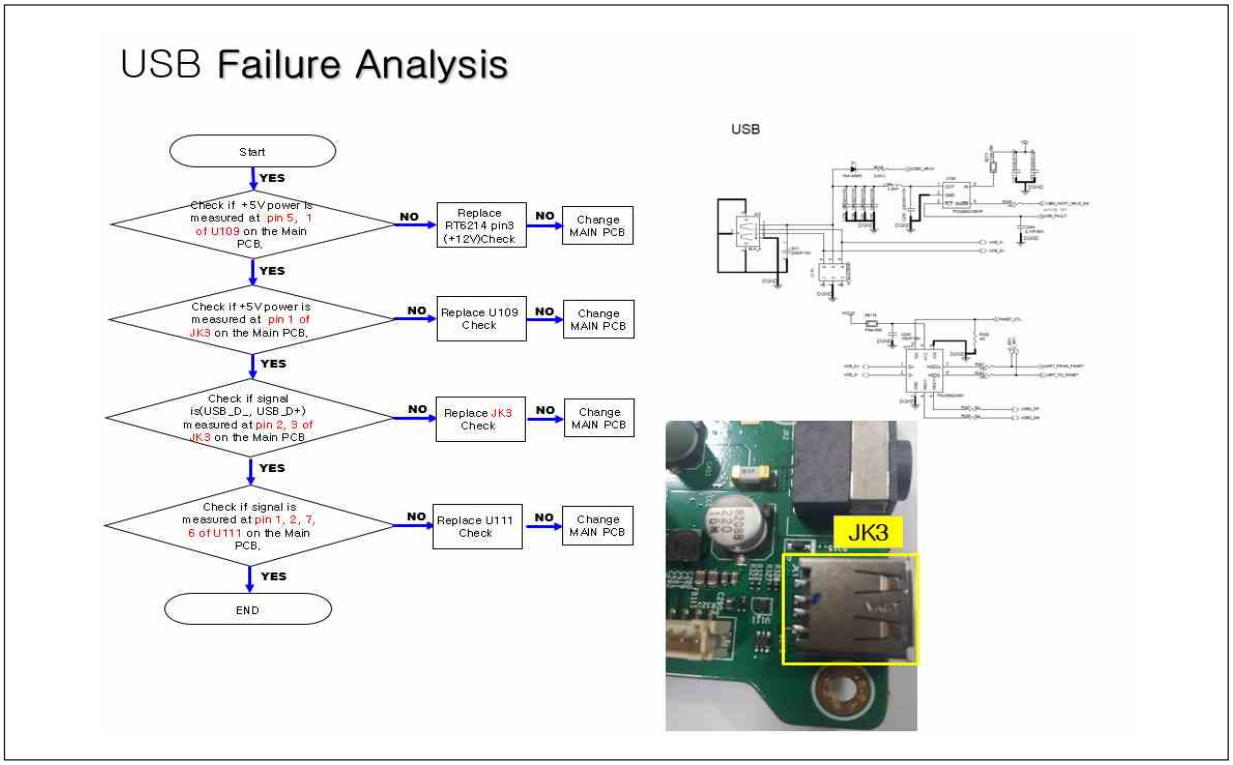

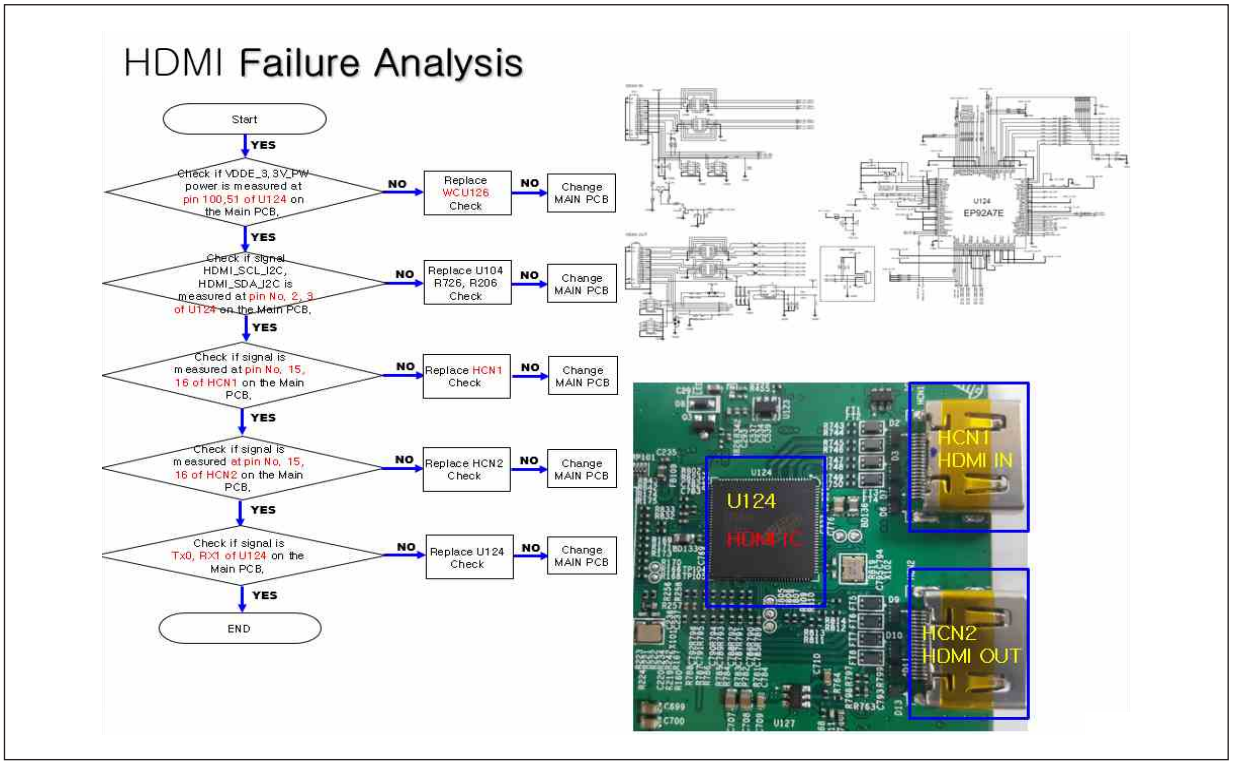

4-1-7. Exploded View & Parts (SET)

Exploded View & Parts (SET)

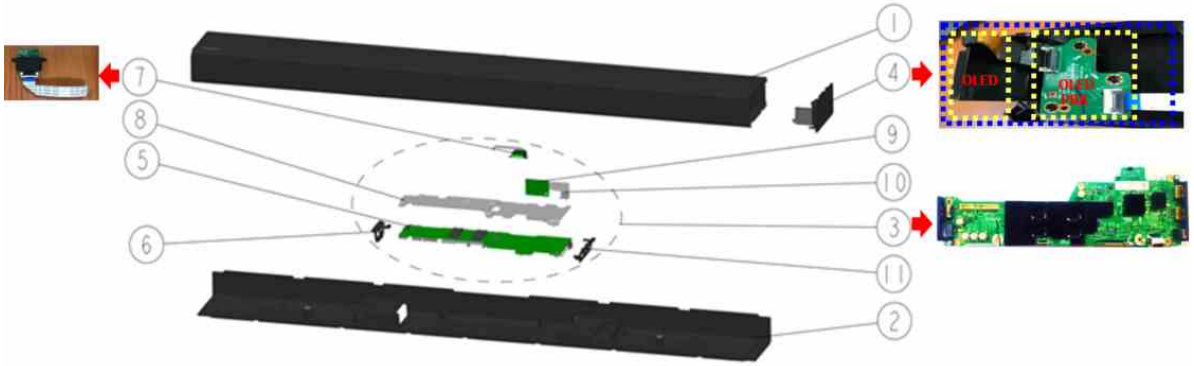

NO	PART CODE	Parts Name	Description & Specification
1	AH81-12713A	ASSY COVER TOP,DECO-BUTTON	ASSY COVER TOP,DECO-BUTTON
2	AH81-11737A	ASSY-COVER REAR	ASSY,HW-Q60T/ZA
3	AH81-11736A	ASSY MAIN PCB KIT	ASSY KIT,HW-Q60T/ZA
4	AH81-11751A	ASSY-COVER-SIDE,R	ASSY,HW-Q60T/ZA (including OLED Moldule + OLED PBA)
5	AH81-11739A	ASSY-PCB-MAIN	MAIN PCB ASSY
6	AH81-11740A	ASSY-COVER-USB	PC+ABS,V-0,NH-1017D / K21441
7	HEPOP00002A	ASSY PBA Bluetooth Module	ASSY PBA Bluetooth Module,Q60T
8	AH81-11743A	BRKT-MAIN	EGI-SECC,T0.8,NATURAL
9	AH81-09787A	ASSY-WIRELESS-MODULE	WSM520V,40.4x26.0x3.2mm
10	AH81-11744A	FFC-CABLE	BTYPE,24p,0.5mm Pitch,L80
11	AH81-11745A	ASSY-COVER-TERMINAL	PC+ABS,V-0,NH-1017D / K21441

4-2. Measures to be taken when the Protection Circuit operates

4-2-1. AMP Pre-Inspection relating to Power Protection

If you think there are problems at the AMP PCB, you can check the PCB without disassembling the set by following the test below.

Caution

- Do not connect the power cord during the test!

Resistance using Tester	
F/R CH	137K ohm

- If there is a large difference than the value listed above then the AMP PCB has a problem.

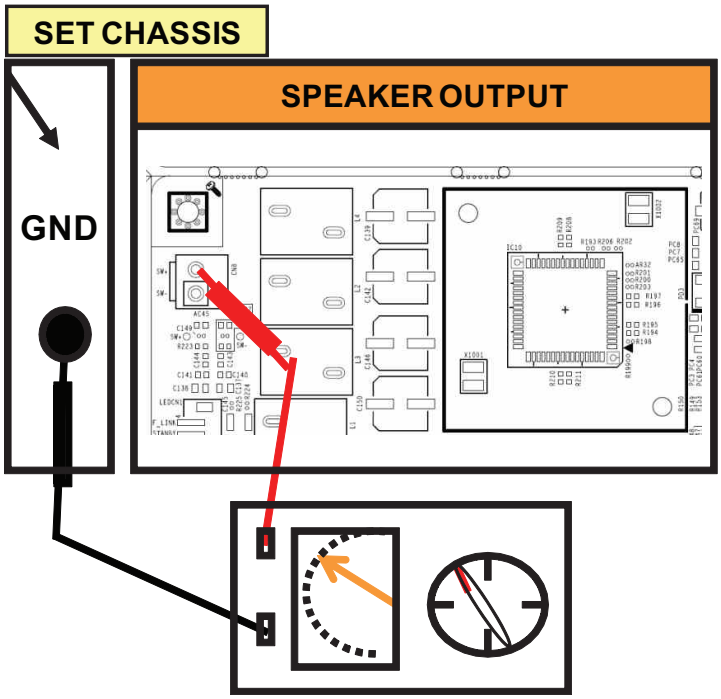

4-3. Initialization & Update

4-3-1. Set Initialization method

■ Sound Bar(Using the remote control)

1. Prepare the remote control.
2. Turn the unit off.
3. Press and hold the “Play/Pause” button on the remote for more than 5 seconds.
4. If it was successful, “INIT”->”OK” will be displayed for 2 seconds and be turned off.

■ Sound Bar(Without Using the Remote control)

1. Turn the unit on.
2. Press and hold the “+” button and “-” button on Sound Bar simultaneously for 5 seconds.
3. If it was successful, “INIT”->”OK” will be displayed for 2 seconds and be turned off.
4. The Sound bar will be turned off

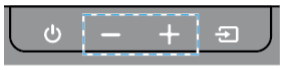

Top Panel

4-3-2. Pairing method

■ Sound Bar(Using the remote control)

1. Press and hold ID SET on the rear of the subwoofer(or Optional surround speakers) for least 5 seconds.
2. Prepare the remote control.
3. Turn the unit off.
4. Press and hold the “MUTE” button on the remote for more than 5 seconds.
5. If it was successful, “ID SET” will be displayed for some seconds and be turned off.
6. When the soundbar is turned on, it will start finding wireless Subwoofer(or surround speakers)

■ Wireless subwoofer and rear speakers

1. Press ID Set button on the sub and rears.

※ Guide the customers to make sure each of components are in ID Set mode.

4-3-3. How to check the Firmware version

■ Software check method ... Sound Bar (Remote control use)

1. Prepare the remote control.
2. Turn the unit off.
3. Press the “SOUND CONTROL” button for 5 seconds. .
4. OLED will display each versions like below sequence. (DSP → HDMI → Tx → Rx)

Tx : Wireless Tx module in the soundbar
Rx : Wireless Rx module in the rear kit

R2 VERSION DISPLAY
- NO CONNECT REAR : R2 ---
- CONNECT REAR : R2 XXX

4-3-4. USB Update procedure

- Step 1 : Power on the device. You can see the following OLED display.
  Please Change Function “USB”

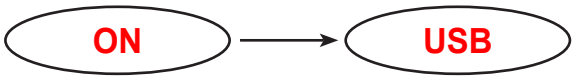

- Step 2 : Prepare the USB disk with update files then plug-in to the USB port.
  You can see the following OLED display.

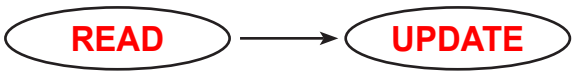

- Step 3 : Progressing update.

in case of Backend, HDMI and Wireless update, you can see the following OLED display.

4-3-5. USB Update procedure

- Case 1 : Backend Update. (HMS-Q60TWWB-XXXX.X.bin)

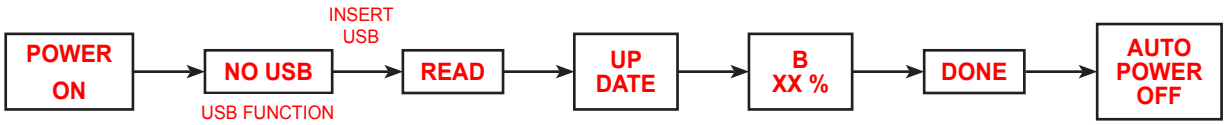

- Case 2 : HDMI Update. (HMS-Q60TWWH-XXXX.X.ssp).

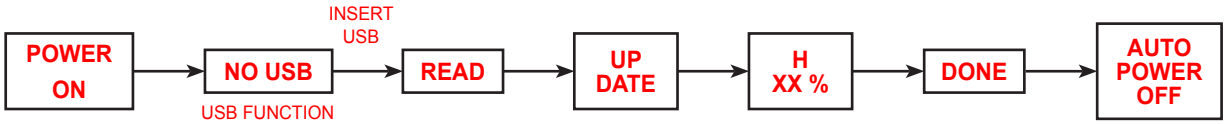

- Case 3 : Wireless Tx Module Update. (HMS-Q60TWWMR-T0XXX.ssp)

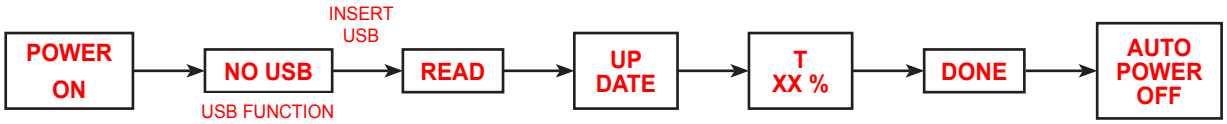

- Case 4 : Wireless SubWoofer Update. (HMS-Q60TWWMR-R0XXX.ssp)

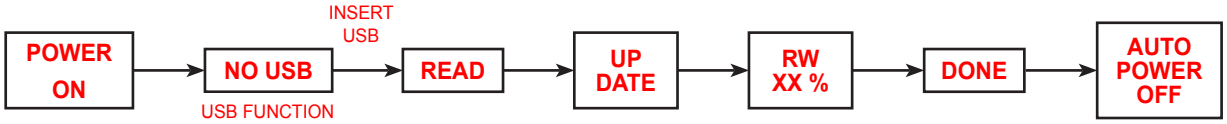

- Case 5 : Wireless Rear Speaker Update. (HMS-Q60TWWMR-R2XXX.ssp)

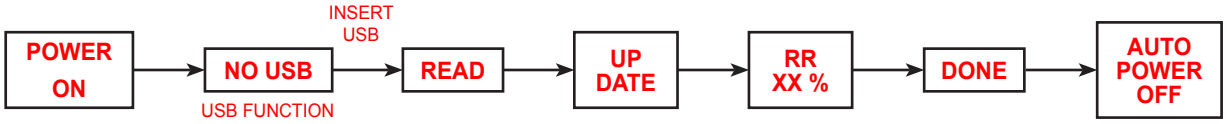

ashakaas